ai16323586959_1J12A0445_H15R_QUG_202100909.pdf 1 2021/9/23 8:58:18

LEDLENSER H15R

H15R Core

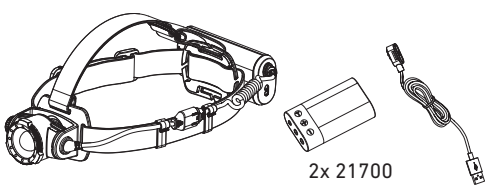

H15R Work

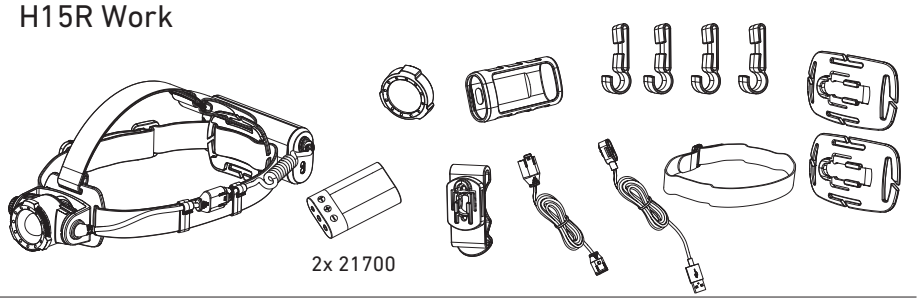

Battery Replacement

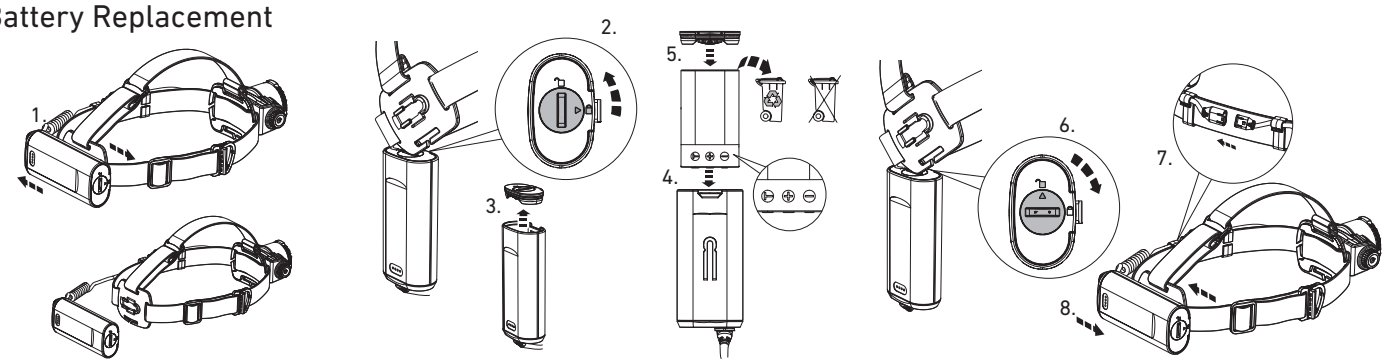

Operation

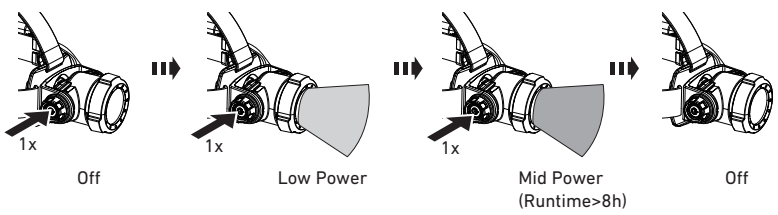

Dimming

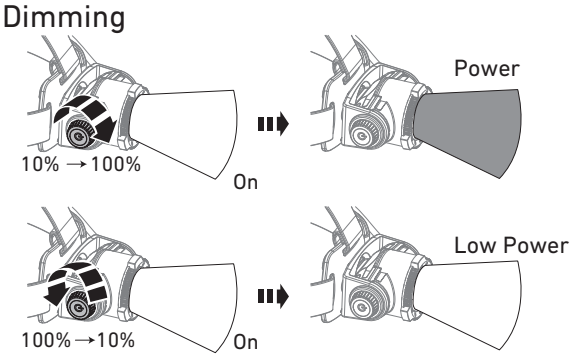

Transportation Lock

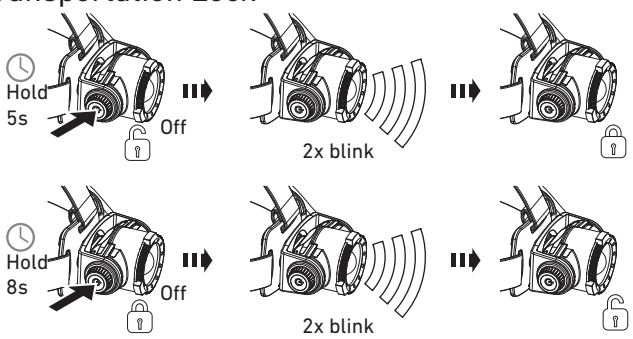

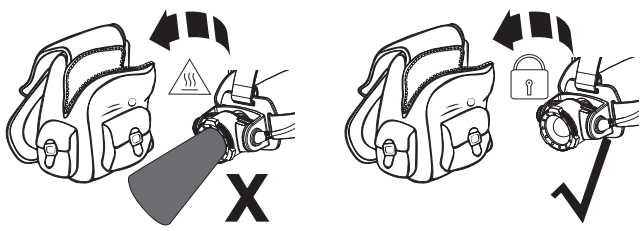

App Mode

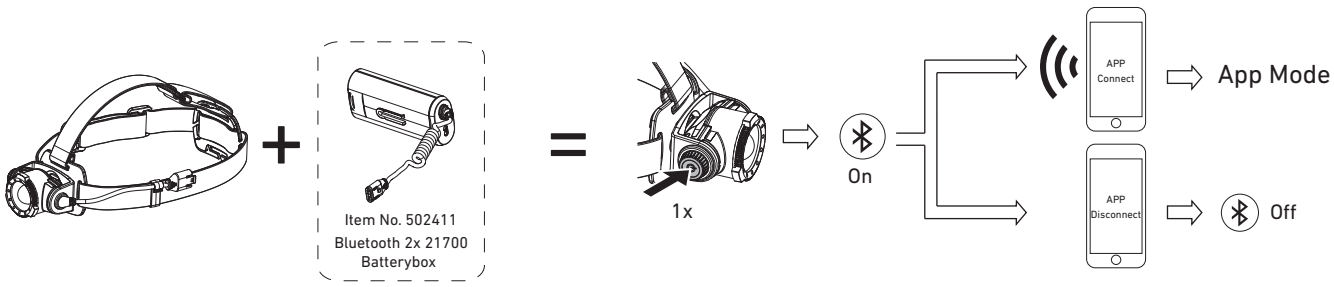

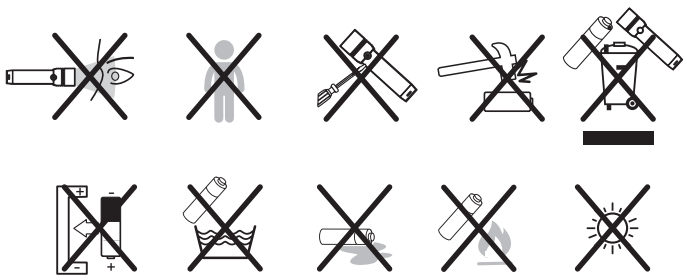

Ledlenser GmbH & Co. KG
Kronenstrasse 5-7 • 42699 Solingen • Germany
Phone +49 212/5948-0 Fax +49 212/5948-200
info@ledlenser.com

ledlenser.com

H15R_V.02
2021.07.07
1J12A0445

ai16323586959_1J12A0445_H15R_QUG_202100909.pdf 2 2021/9/23 8:58:21

Battery Indicator

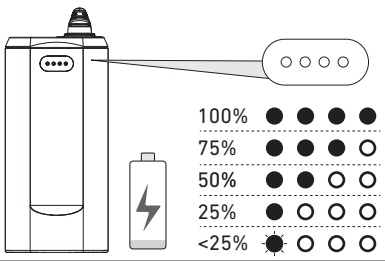

Backup Mode

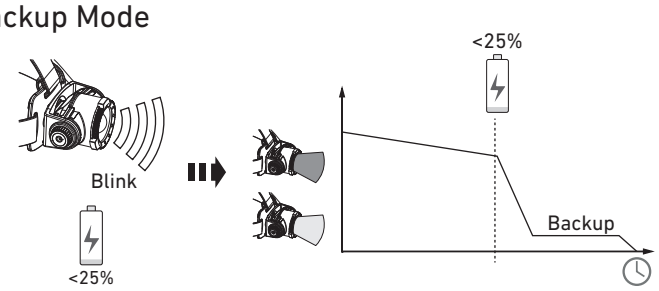

Magnetic Charging System

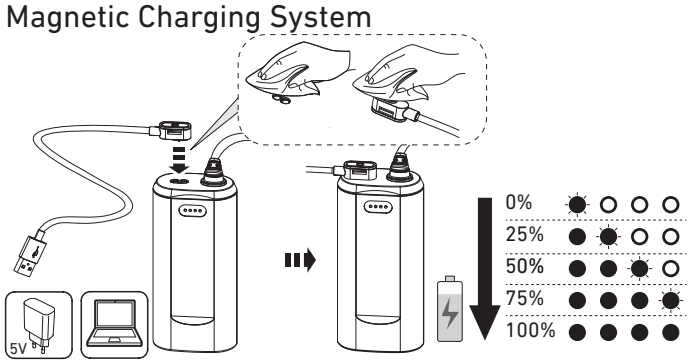

Lamp Head Rotation

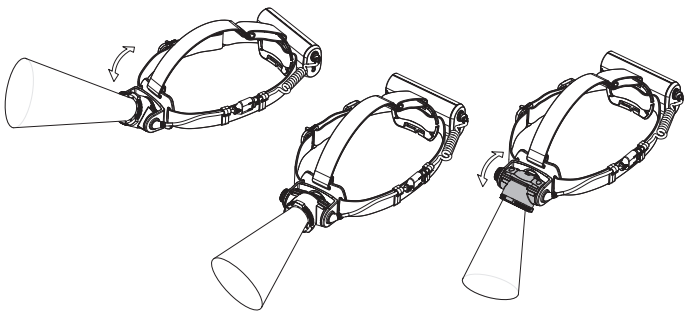

Advanced Focus System

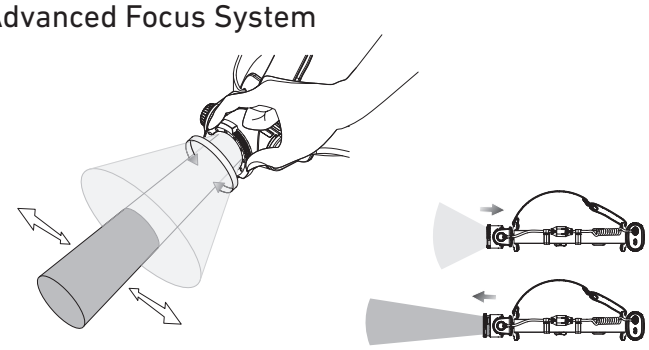

Boost

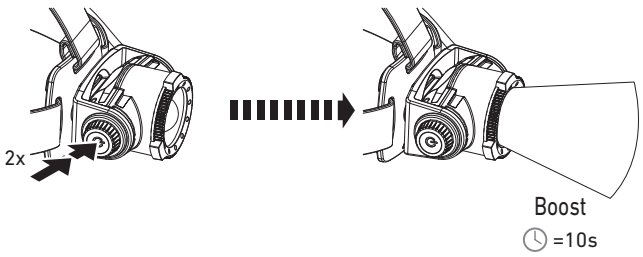

Protective Covers (H15R Work)

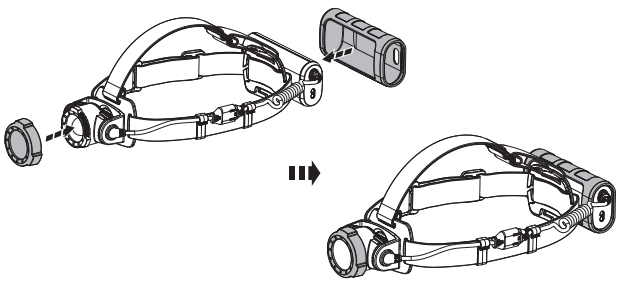

Extension Cable (H15R Work)

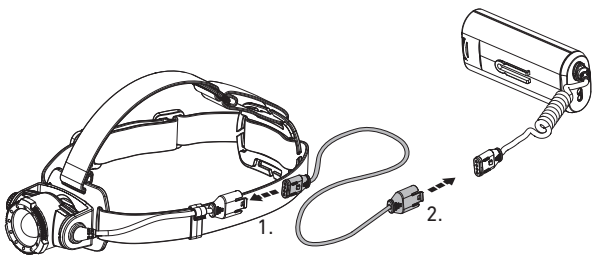

Belt Clip (H15R Work)

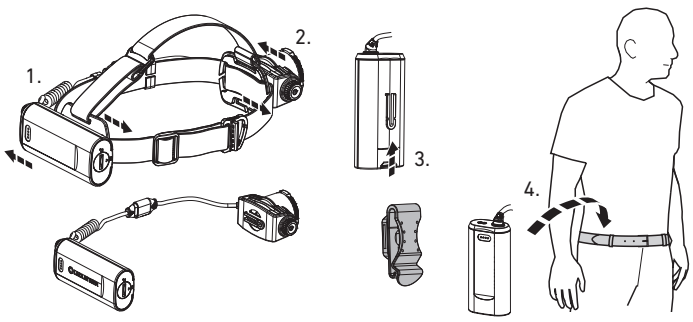

Transparent Silicone Helmet Band (H15R Work)

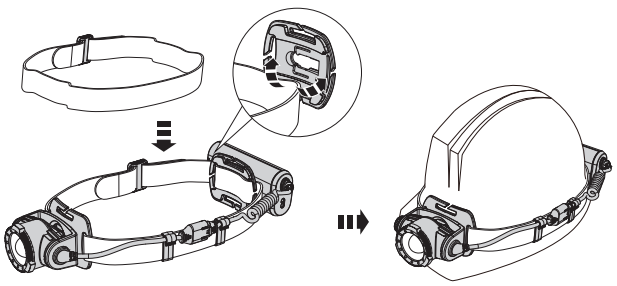

Helmet Fixing Clips (H15R Work)

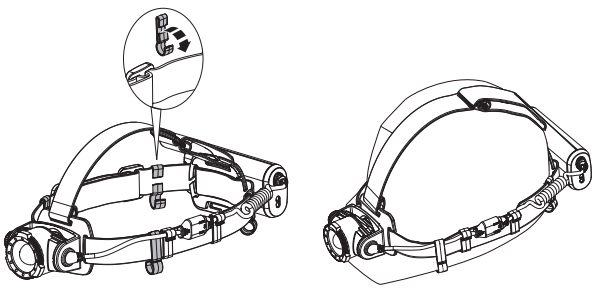
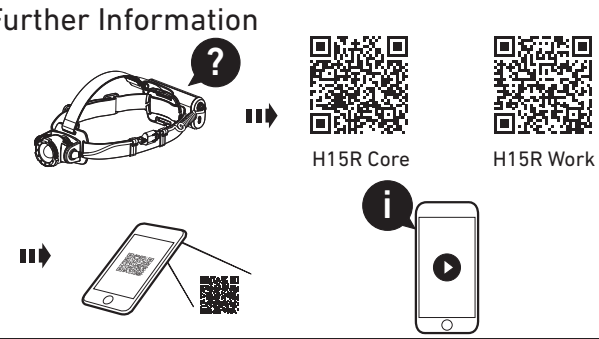
Further Information